3 Phase Brushless Servomotors specification Ver. 2.0

Specifications

Typical values

Model	*Rated power*	*Peak power*	*Rated speed*	*Cont. torque*	*Peak torque*	*Optimal supply voltage*	*Cont. current*	*Peak current*
BL42-28	28W	84W	3000 RPM	0.1 Nm	0.3 Nm	24-50 Vdc [2]	1.56 Adc	4.68 Adc
BL42-63	63W	189W	3000 RPM	0.2 Nm	0.6 Nm	24-50 Vdc [2]	3.44 Adc	10.3 Adc
BL70-150	150W	450W	3000 RPM	0.5 Nm	1.5 Nm	40-90 Vdc [2]	5.6 Adc	16.8 Adc
BL70-300	300W	900W	3000 RPM	1.0 Nm	3.0 Nm	90-160 Vdc [2]	6.6 Adc	20.0 Adc
BL70-300-48V	300W	900W	3000 RPM	1.0 Nm	3.0 Nm	40-90 Vdc [2]	9.6 Adc	29.0 Adc

Model	*Base length (L)*	*Frame size*	*Weight*	*Encoder resolution*	*Phase resistance*	*Phase inductance*	*Poles*	*Rotor inertia*
BL42-28	65 mm	42 x 42 mm	0.45 kg	4000 CPR	TBD	TBD	8	TBD
BL42-63	85 mm	42 x 42 mm	0.55 kg	4000 CPR	TBD	TBD	8	TBD
BL70-150	60 mm	70 x 70 mm	1.30 kg	Note 3	0.4 Ohm	1.0 mH	8	0.000037 kg·m²
BL70-300	90 mm	70 x 70 mm	2.08 kg	Note 3	0.74 Ohm	1.5 mH	8	0.000074 kg·m²
BL70-300-48V	90 mm	70 x 70 mm	2.08 kg	Note 3	TBD	TBD	8	0.000074 kg·m²

[1]) CPR equals effective counts per revolution after 4X decoding. CPR = motor positioning resolution. Pulses per revolution (PPR a.k.a. P/R) is ¼ of CPR value.

[2]) Voltage ratings are not strict. Higher (up to +30%) or lower (to few volts) voltages can be also used. Lower than recommended supply voltage leads to reduced top speed (RPM) but doesn't affect torque output.

[3]) Encoder resolution choices vary and two alternative resolutions are available. Check from web shop specifications at the moment of purchase. Available options: 4000 CPR[1] or 10000 CPR[1].

BL42

Dimensions in mm

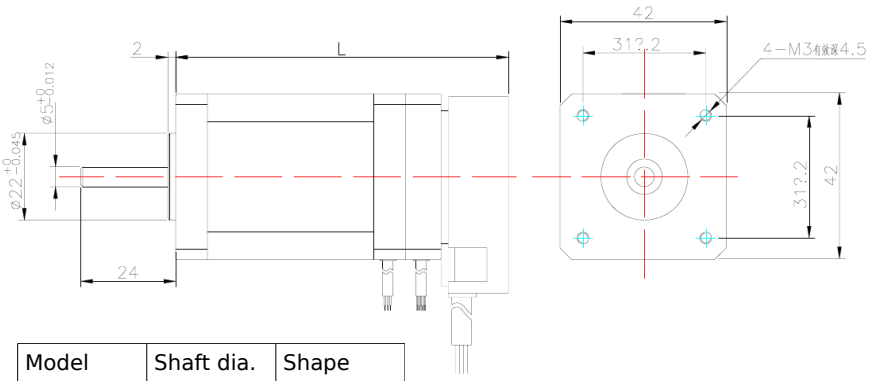

Model	Shaft dia.	Shape
BL42-28	5 mm	Slick
BL42-63	5 mm	Slick

BL70

Dimensions in mm

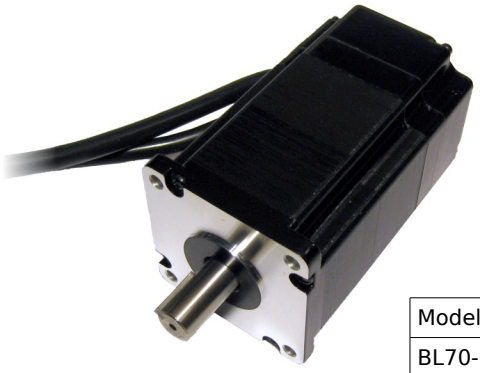

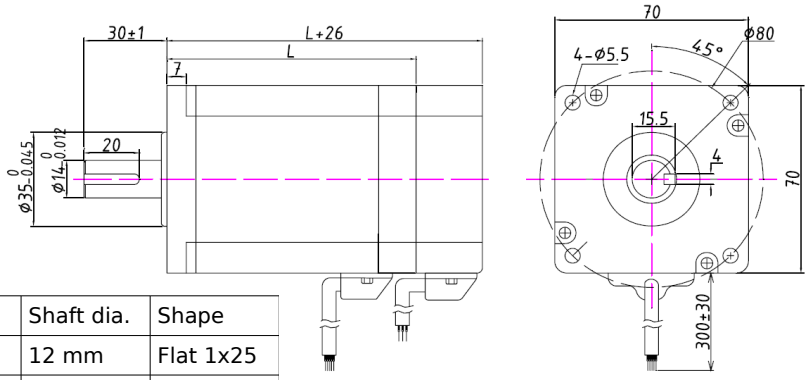

Model	Shaft dia.	Shape
BL70-150	12 mm	Flat 1x25
BL70-300	14 mm	Key 4x20

Encoder & hall sensor wiring

Motors are supplied with about 30 cm long cables with middle connectors. Cable extension is usually necessary (sold separately).

BL42 colors	***BL70 colors***	***Signal***
2x Black wires	Black	GND
2x Red wires	Red	+5 VDC
Yellow	Yellow	Hall U+
N/A	Yellow/Black	Hall U-
Green	Green	Hall V+
N/A	Green/Black	Hall V-
Blue	White	Hall W+
N/A	White/Black	Hall W-
White	Brown	A+
White/Black	Brown/Black	A-
Green	Gray	B+
Green/Black	Gray/Black	B-
Yellow	Orange	Index+
Yellow/Black	Orange/Black	Index-

Motor phase wiring

Color	***Phase***
Yellow	U
Green	V
Blue	W

Drive configuration parameters

Refer to configuration guides and files found from Granite Devices Wiki. Especially:
http://granitedevices.com/wiki/Granite_Devices_servo_motors

Design tips for mechanics

Follow the given guidelines for high servo performance:

- Total reflected **load inertia** should be no more than 10 times the rotor inertia (inertia mismatch ratio). Less than 3:1 ratio is recommended for high performance systems. The optimum ratio is 1:1.
- Recommended way to reduce reflected load inertia is to use **timing belt reduction**
- Coupling to mechanical load should be **as stiff as possible**
- Coupling to mechanical load should have **zero backlash**

Calculation of rotary/linear system reflected inertia is out of this document scope. For calulation equations, see: http://www.engr.sjsu.edu/bjfurman/courses/ME106/ME106pdf/inertiaformulas.pdf