ARGON Servo Drive

Device type	Servo motor drive
Model number	ARGON-4K000
Supported motors	AC, DC, BLDC, Linear
Control modes	Position, Velocity, Torque
Status	Active production, started 2013
Electrical	
DC supply voltage	84 – 380 VDC
AC supply voltage	85 – 264 VAC
Output current range	0.1 – 16 A
Setpoint signals	Pulse and direction, PWM, Analog, SimpleMotion V2
Feedback devices	Quadrature encoder, Hall sensors, Resolver/synchro (with adapter). SinCos, SSI, BiSS, and tachogenerator planned.
General	
Configuration tool	Granity (http://granitedevices.com/wiki/Granity)
Compliance	CE (EMC & LVD directives)
3D model	IGES & STEP available

Table of Contents

1. Reading the manual....3
2. ARGON Features....4
2.1. State of the Art....4
2.2. Control....4
2.3. Protections & Ruggedness....4
2.4. Applications....5
2.5. Main functionality....5
3. Specifications....6
3.1. Electrical characteristics....7
3.1.1. Quadrature encoder electrical characteristics....7
3.2. Mechanical....8
3.3. Environment....8
3.4. Power supply....8
3.5. Motor output....9
3.6. Regenerative resistor....10
3.7. Feedback device support status....10
3.8. Setpoint signal / reference inputs....11
3.9. Communication....11
3.10. Safety....12
4. Ports and connectors....13
4.1. J1 feedback device port....13
4.1.1. Incremental encoder....15
4.1.1.1. Differential....15
4.1.1.2. Single ended....15
4.1.2. Hall sensor....16
4.2. J2.1 and J2.2 SimpleMotion & E-stop ports....17
4.2.1. Bus properties....17
4.2.2. PC connection....17
4.2.3. Using SMV2 port as E-stop & Enable input....17
4.2.4. Wiring with SMV2BRK....17
4.2.5. Wiring with IONICUBE devices....18
4.2.6. Wiring with bare RJ45 cable....18
4.3. J3 24 V power and motor brake port....18
4.3.1. Pin-out....18
4.4. J4 power & motor port....18
4.4.1. Pin-out....18
4.4.2. J4 wiring guide....19
4.5. J5 Inputs/Outputs....20
4.5.1. Pin-out....21
4.5.2. Internal schematics of pin groups....23
4.5.3. Wiring guide....23
4.5.3.1. Supply pins....23
4.5.3.2. High speed digital input group....24
4.5.3.3. Analog input group....24
4.5.3.4. Digital output group....25
4.5.3.5. Digital input group....25
4.5.4. Examples....25
4.5.4.1. Wiring axis limit and home switches to J5....25
4.5.4.2. Alternative limit switch wiring considerations....26
4.5.4.3. Typical setpoint examples....28
4.5.4.4. 0 – 10 V analog input with digital direction signal....28
4.5.4.5. Complete example with pulse & direction....28

4.5.4.6. Complete example with differential analog setpoint....29
4.6. J6 Expansion slot....29
5. Making the first Granity connection....30
5.1. The setup process....30
5.2. List of things needed....32
5.3. Preparations....32
5.4. Device bus....33
5.4.1. Bus address....33
5.4.2. Bus termination....35
5.4.3. Stub....35
5.4.4. Troubleshooting....35
5.5. Wiring overview....36
5.5.1. Mating parts....38
5.5.2. Wiring recommendations....38
5.6. Basic wiring scheme....38
5.6.1. Wiring a single drive....38
5.6.1.1. Connecting multiple drives....39
6. LED indicators....39
6.1. How to read indications....39
6.2. List of all LD3 and LD4 sequences....39
6.2.1. Faults originated from I/O side of drive....40
6.2.2. Faults originated from GraniteCore side of drive....40
6.2.3. Motor control states....40
7. Further reading....41

1. Reading the manual

In addition to the information presented in this manual, please follow the hyperlinks embedded in order to gain deeper understanding of the topic at hand.

Many useful and important key points are presented as:

	Electrical hazard warning (safety)
	Warning/Caution (safety)
	Machine danger (safety)
	Risk of equipment damage
	Info
	Tip

	Disclaimer: In no event the Product Information or parts hereof shall be regarded as guarantee of conditions or characteristics. The Product Information or any part thereof may also not be regarded as a warranty of any kind. No liability of any kind shall be assumed by Author with respect to Product Information or any use made by you thereof, nor shall Author indemnify you against or be liable for any third party claims with respect to such information or any use thereof.

Read the official and latest setup guide of the Argon servo drive thoroughly before installing or operating it, found here: http://granitedevices.com/wiki/Argon_(servo_drive).

NOTE: This guide attempts to be as complete and precise as humanly possible. However, it might have imperfections. Writers of this guide are not responsible if possible damages or losses caused by mistakes or lacks of this guide.

IMPORTANT: Argon drive should be installed and operated only by qualified electricians. Dangerous voltages and mechanics are involved and possibility of severe injury or even death is possible in case of installation or usage errors.

	The latest version of this guide can be found in this wiki: http://granitedevices.com/wiki/Argon_user_guide

2. ARGON Features

2.1. State of the Art

- High dynamic range torque control
- Wide range motor support, from DC, BLDC, AC and Linear, from 50 W to 1500 W
- Sophisticated dead-time distortion elimination
- Flexible feedback device port supporting incremental, serial and analog encoders and resolvers [1]
- Dual CPU architecture with dedicated open source ARM CPU for user functionality
- High functional density and cost efficiency: all features included in the standard model
- 3-level PWM output with reduced motor heating

1) At the moment only incremental encoder feedback is supported, more devices supported in upcoming firmware upgrades

2.2. Control

- Input setpoint signals including pulse and direction, quadrature, analog and PWM
- Multidrop & multiaxis capable real-time SimpleMotion V2 field bus for setup and control
- Internal axis homing function with sensorless hard-stop operating mode

2.3. Protections & Ruggedness

- 3-way Safe torque off with motor braking
- Prevent machine damage via I^2t (motor temperature modeling), blocked motion and tracking error detection
- Industry leading ruggedness: over current, short circuit, over voltage, under voltage and over

temperature protections, internally fused, data/communication error detection
- Internal AC inrush current limiter and surge protection
- High tolerance for fluctuations in AC supply voltage
- 24 months warranty

2.4. Applications

- Industrial servo control
- CNC
- Precision robotics
- Spindles
- Semiconductor handling
- Food & white goods

2.5. Main functionality

Function	Description

Servo motor drive	Closed loop control of various types of servo motors by sinusoidal field oriented control with dead-time distortion correction and high dynamic range torque control.
	• Support over 97 % of all the servo motors below 2 kW in the market
	• Synchronous AC & BLDC motors
	  • Sinusoidal and trapezoidal commutated
	  • SPM (Surface Permanent Magnet) and IPM (Internal Permanent Magnet) types
	• Brush DC motors
	• Linear motors
	  • Iron core
	  • Ironless (with external inductive filter)

Control modes	• Torque control • Velocity/speed control • Position control
Setpoint types	See setpoint signal / reference inputs list • Direct set-point tracking via pulse and direction, PWM, Analog, Quadrature, SimpleMotion V2 • Pulse burst positioning • Buffered synchronous motion commands via SimpleMotion V2
Closed loop	Cascaded control loops (PIV) • Torque / current control, update frequency 17.5 kHz • Velocity control, update frequency 2.5 kHz • Position control, update frequency 2.5 kHz
Feed-forwards	Feed-forwards working in velocity & position control modes • Acceleration (inertia canceling) feed-forward • Velocity (friction canceling) feed-forward

Function	Description
Homing	Integrated homing function for position control mode • Sensorless hard-stop homing • Home switch search • Index pulse search • Soft position limits (eliminate limit switches)
Feedback devices	Complete feedback devices list later in this document.

Safety	• Safe torque off with 3-way redundancy
	• Stopping motor on errors
	  • Tracking error (velocity & position)
	  • Over speed error
	  • Limit switch
	• DC motor runaway prevention on feedback loss
	• Communication error detection

Protections	• Over current • Short circuit (phase-to-phase) • I^2t motor thermal protection • Over & under voltage • Over temperature
Power supply	Two power supply methods • Integrated AC mains power supply: single phase 85 – 264 VAC 50/60 Hz, 0 – 16 A • Externally supplied 40 – 380 VDC Additionally an external 24 VDC logic supply required
Motor output current	• 0 – 11 A continuous (peak of sine) • 0 – 16 A 1 second peak (peak of sine)
Commissioning	• Granity setup software • Online user guide
Compliance	CE (LVD & EMC): EN 61800-5-1:2007 and IEC 61000-6-1:2005

3. Specifications

	Exceeding ratings may affect drive operation and cause instability or even damage the drive or other equipment. Damaged equipment may pose danger to users.

3.1. Electrical characteristics

For more details, see chapter 4 “Ports and connectors”.

Property	Typical value	Maximum rating	Units
Protections (all I/O lines)	over voltage, ESD, short circuit, reverse polarity		
Isolated digital input (GPIx) logic 1 voltage	4.5 – 24	25.5	V
Isolated digital input (GPIx) logic 0 voltage	0 – 1.3		V
Isolated digital output (GPOx) voltage	0 – 24	25.5	V
Isolated digital output (GPOx) current drive capability [1,2]	5 – 20	40	mA
High speed digital input (HSINx) voltage range	2.7 – 5.5	6.0	V
Analog input input (ANAINx) voltage range	±10	±25 vs GND	V
Analog input input (ANAINx) resolution	12		bits
Enable input input logic 1 voltage	20 – 24	25.5	V
STO input input logic 1 voltage	20 – 24	25.5	V
Motor brake voltage	12 – 24	25.5	V
Motor brake load current	0 – 0.5	0.7	A

1) Actual output drive capability may vary from unit to unit. Minimum guaranteed capability is 5 mA.

2) Do not exceed GPO safe operating area (SOA). Loading GPOx pin is within SOA when following equation is true: Voltage_drop_over_GPOx_pin_pair * Load_current < 0.1 W. Example: if voltage over GPOx pins is 5 V and current 0.01 A, then
5 V * 0.01 A = 0.05 W which is less than 0.1 W so the operation is safe. The recommended practice is to drive only high impedance circuits with GPO to avoid overloading.

3.1.1. Quadrature encoder electrical characteristics

Property	Value	Units	Remarks
Encoder count rate	0 – 4	MHz	After 4x decoding, digitally filtered
Supply voltage	4.8 – 5.2	V	Supplied from drive
Supply current	0 – 500	mA	Supplied from drive

3.2. Mechanical

Property	Value	Units
Dimensions (with wall mounting tabs)[1]	51×197×127 (W×H×D)	mm
Dimensions (excluding wall mounting tabs)[1]	51×177×127 (W×H×D)	mm
Weight	0.88	kg
Case materials	Steel (cover), aluminum (heat sink)	
Drawings: 2D (PDF) - http://granitedevices.com/w/images/0/0d/Argon_asm_dimensions.PDF 3D (IGES & STEP) - http://granitedevices.com/w/images/d/d8/Argon_3d_models.zip		

1) Wall mounting tabs are fixed part of enclosure

3.3. Environment

Property	Value	Units
Operating temperature	10 – 70	°C
Storage temperature	-30 – 90	°C
Humidity	0 – 95, non-condensing	%
Power dissipation	2 – 100 [1]	W

1) Power dissipation is output current and input voltage related.

3.4. Power supply

Supply[2]	Input voltage	Input current typ
Logic power	24 VDC ±10 %	0.1 – 0.4 A
Motor power[3]	85 – 264 VAC 50/60 Hz	0 – 16 A [1]
	70 – 380 VDC [4]	0 – 16 A [1]

1) Estimating true current or power consumption based on this table may be difficult as current demand typically varies greatly and almost completely depends on motor load conditions.

2) Both logic and motor supplies are required.

3) Features internal inrush current limiter

4) Possible to use from 45 VDC upwards, however short circuit protection feature is lost below 70 VDC.

3.5. Motor output

Property	Value	Units	Remarks
Supported motors	AC, BLDC, DC, Linear		Permanent magnet motors only
Continuous output current	0 – 11	A [1]	User settable limit
Peak output current	0 – 16	A [1]	Duration 1 sec, then returned to continuous limit. User settable current limit.
Maximum effective motor phase output voltage	Max 88 % of input AC supply voltage AC or 124 % DC.		I.e. for 230 VAC drive supply, max motor output is 202 VAC (AC/BLDC/Linear) or 285 VDC (brush DC).
Switching frequency	17.5	kHz	
Maximum modulation depth	88	%	Maximum effective output is 88 % of HV DC bus voltage.
Torque control bandwidth (typ.)	1 – 3.3	kHz	Motor coil dependent
Torque control cycle time	57.1	µs	
Position & velocity control cycle time	400	µs	
Power conversion efficiency	90 – 95	%	Under typical conditions
Motor inductance range @ 230 VAC	1.4 – 25	mH	
Motor inductance range @ 115 VAC	0.7 – 25	mH	
Motor power range	0.05 – 1.5	kW	
AC commutation frequency	0 – 400	Hz	

1) Peak value of sine

3.6. Regenerative resistor

Property	Value	Units
Maximum current	6	A
Series fuse	8	A
Minimum allowed resistance @ 230 VAC supply	63	Ω
Minimum allowed resistance @ 115 VAC supply	35	Ω
Resistor power dissipation	0 – 2400 [1]	W

1) Power dissipation depends on how much system's kinetic energy is directed to the resistor

3.7. Feedback device support status

Feedback device type	Status	Electrical interface
Quadrature incremental encoder	Standard feature	Differential 3 – 5.5 V (RS422), Single ended 3 – 5.5 V (CMOS,TTL,open collector)
Hall sensors	Standard feature	Single ended 3 – 5.5 V (CMOS,TTL,open collector). Differential signals accepted.
Analog SinCos encoder	Not yet available, planned in firmware version 2.1	1Vp-p signal, 16X, 64X or 256X resolution interpolation factor (user selectable) [2], max 500 kHz input frequency
Resolver/synchro	Supported, with adapter	10 kHz excitation
Serial SSI encoder	Planned [1]	RS422/RS485
Serial BiSS encoder	Planned [1]	RS422/RS485
Tachogenerator	Planned [1]	

1) Supported already by hardware, usage possible after firmware upgrade

2) The final resolution will be 4 * line_count * interpolation_factor. I.e. with 1000 lines/electrical cycles per revolution SinCos encoder, the supported resolutions are 64000, 256000 and 1024000 counts per revolution. SinCos encoder can be also used without interpolation (4 * line_count resolution).

3.8. Setpoint signal / reference inputs

Setpoint signal type	Status	Electrical interface
Analog	Standard feature	• Up to ±10 V or any lower voltage range • ±10 V (bipolar) and 0 – 10 V with polarity input (unipolar) supported
Pulse and direction	Standard feature	Up to 4 MHz step rate, 5V signaling
Quadrature	Standard feature	Up to 4 MHz count rate, 5V signaling
PWM	Standard feature	• 1 – 30 kHz PWM carrier frequency (f_{PWM}), ~3 kHz for optimal operation. • Single signal (no polarity input), zero setpoint at 50 % duty • PWM signal is sampled at 60 MHz timer thus reading resolution is 60 MHz/f_{PWM} • PWM+Polarity input mode available on request
Serial communication	Standard feature	SimpleMotion V2 real-time serial bus with open source SDK. Connect through RS485 or USB.
Stand-alone operation or custom setpoint signal	User implementable	May be implemented in the Argon open source firmware
EtherCAT	Planned	Realized with add-on board

3.9. Communication

Property	Value	Units
Communication protocol	SimpleMotion V2	
Default bitrate	460800	BPS
Maximum number of Argon devices chained in a single bus	15	pcs
Command throughput	Up to 10000	Commands/s

3.10. Safety

Feature	Properties	Remarks
Safe torque off	3-way redundancy with 2 physical STO inputs • Cut AC input by safety relay @ STO1 input • Cut power stage gate voltage @ STO2 input • Disable power stage by software @ STO2 input	STO1 safe up to 6 A AC RMS input current. Not operational if AC input > 6 A RMS AC or if DC voltage is being supplied to drive through L & N terminals or VP & VN terminals.
Control error detection	• Tracking error (velocity & position) • Over speed error • Limit switch • DC motor runaway prevention on feedback loss • Communication error	
Electrical safety	• Galvanic isolation between I/O side and power side • Internal fuse on AC input • MOV based transient overvoltage protection • Earth leakage current typ. < 0.5 mA • ESD, short circuit, reverse polarity protection on all pins • Surge protection on AC & DC power inputs	Galvanic isolation on J1, J2, J3, and J5 connectors against J4 with live AC mains voltages
Overload safety	• Over current • Short circuit (phase-to-phase) • I^2t motor thermal protection • Over & under voltage • Drive over temperature	

4. Ports and connectors

	Some features might not be available with factory installed firmware (FW). These will be specifically noted.

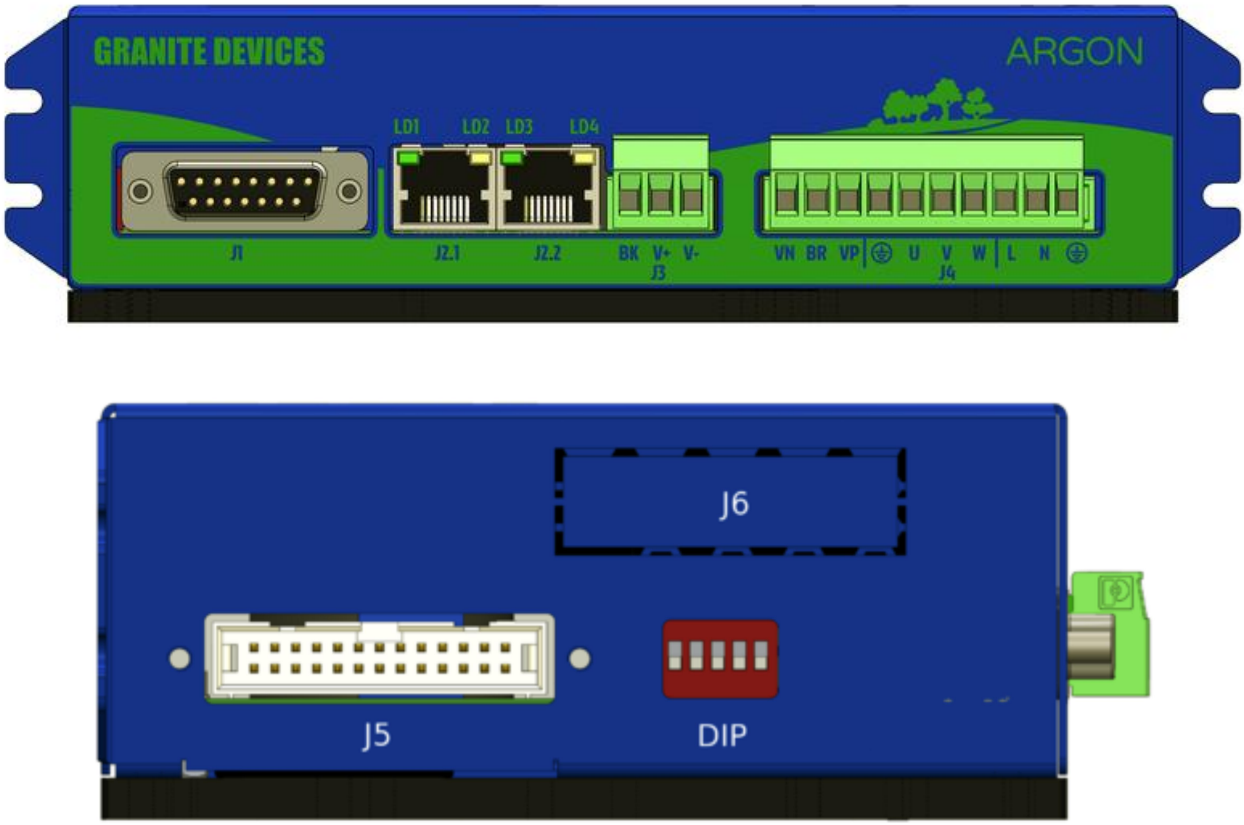

Illustration 1: Argon ports and connectors

4.1. J1 feedback device port

J1 connector type is 15 pin female D-Sub and should be mated with 15 pin male D-Sub counterpart. Many of the J1 pins have dual functions. The operating mode of pin is determined by feedback device mode selected from Granity.

	The naming conventions of feedback device wires and signals vary between different manufacturers. The most important things to ensure are: - proper ground and supply wiring - sensor voltage levels are compatible

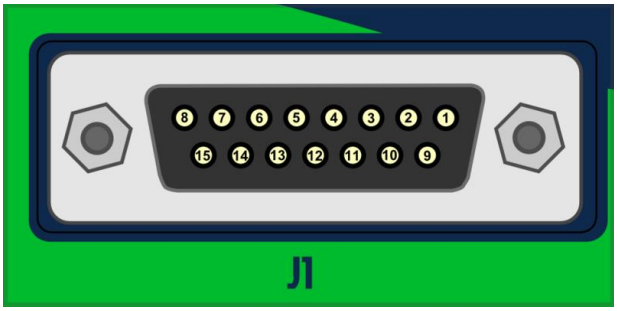

Illustration 2: J1 feedback device port

Pin #	Pin name	Electrical type (in most feedback device modes)	Alternate electrical type (in some feedback device modes)	Connection with various feedback devices
Shell	PE	Earth/case		Feedback cable shield
1	HALL_W	Digital input W		Hall sensor input, phase W
2	HALL_V	Digital input V		Hall sensor input, phase V
3	HALL_U	Digital input U		Hall sensor input, phase U
4	E+	Differential input E+	Differential output E+	Serial encoder I/O
5	B-	Differential input B-	Analog input B+	Quadrature encoder (B channel)/SinCos/serial encoder/resolver input
6	B+	Differential input B+	Analog input B-	
7	A-	Differential input A-	Analog input A-	Quadrature encoder (A channel)/SinCos/serial encoder/resolver input
8	A+	Differential input A+	Analog input A+	
9	5V_OUT	Encoder supply 5V output		Encoder power supply
10	GND	Encoder supply ground		
11	E-	Differential input E-	Differential output E-	Serial encoder I/O
12	D-	Differential input D-	Differential output D-	Serial encoder I/O, resolver coil drive
13	D+	Differential input D+	Differential output D+	
14	C-	Differential input C-		Quadrature encoder index channel (Z channel)/serial encoder input
15	C+	Differential input C+		

Devices with differential signaling may use varying mark-up habits of signal pairs. For example differential signal X (which contains two electrical wires) may be denoted as: X+ and X-, or X and \X, or X and $\overline{X}$. In this Wiki we mark them X+ and X-. Some Fanuc encoders have quadrature signals named as PCA, /PCA, PCB, /PCB, PCZ, and /PCZ which are equivalent to A, B, and Z signal pairs.

4.1.1. Incremental encoder

4.1.1.1. Differential

Differential outputs (RS422 electrical standard) of encoder provides a good EMI immunity and supports long cables with high speed signals. Typical differential encoder has 6-8 wires:

- Ground
- Supply
- Channel A+
- Channel A-
- Channel B+
- Channel B-
- Index+ channel (optional), typically called Z+ or I+
- Index- channel (optional), typically called Z- or I-

The negative outputs have the inverted (or mirror image) signal of the positive outputs.

J1 pin #	Pin name	Pin function	Encoder wire
Shell	PE	Earth/case	Cable shield
5	B-	Differential input B-	Channel B-
6	B+	Differential input B+	Channel B+
7	A-	Differential input A-	Channel A-
8	A+	Differential input A+	Channel A+
9	5V_OUT	Encoder supply 5V output	Encoder supply
10	GND	Encoder supply ground	Encoder ground
14	C-	Differential input C-	Index- (Z- or I-) channel
15	C+	Differential input C+	Index+ (Z+ or I+) channel

Pins not listed in the table are left open or used for other functions such as Hall sensor.

4.1.1.2. Single ended

Single ended output type is usually one of the following:

- Open collector outputs
- TTL outputs
- CMOS outputs

Typical single ended encoder has 4 – 5 wires:

- Ground
- Supply
- Channel A
- Channel B
- Index channel (optional), typically called Z or I channel

J1 pin #	Pin name	Pin function	Encoder wire
Shell	PE	Earth/case	Cable shield
6	B+	Differential input B+	Channel B
8	A+	Differential input A+	Channel A
9	5V_OUT	Encoder supply 5V output	Encoder supply
10	GND	Encoder supply ground	Encoder ground
15	C+	Differential input C+	Index (Z) channel

Pins not listed in the table are left open or used for other functions such as Hall sensor.

4.1.2. Hall sensor

Some AC/BLDC/Linear motors are equipped with a Hall sensor which allows faster drive initialization after power-on as phase search can be skipped. Hall sensor is also necessary in the case where motor is not able to move freely in both directions when powered on (i.e. if axis rests at the end of mechanical travel or is vertical axis).

Many Hall sensors have differential outputs (non-inverted and inverted channels, just like differential encoder), however Argon has only single ended Hall sensor inputs which supports both output types (single ended and differential).

It is possible to connect a Hall sensor together with other feedback devices to the same port. In such case supply pins may be shared between multiple FBD's.

J1 pin #	Pin name	Electrical function	Hall sensor wiring
Shell	PE	Earth/case	Feedback cable shield
1	HALL_W	Hall sensor input, phase W	Hall sensor W (if differential, then W+ channel)
2	HALL_V	Hall sensor input, phase V	Hall sensor V (if differential, then V+ channel)
3	HALL_U	Hall sensor input, phase U	Hall sensor U (if differential, then U+ channel)
9	5V_OUT	Encoder supply 5V output	Hall sensor supply
10	GND	Encoder supply ground	Hall sensor ground

Pins not listed in the table are left open or used for other functions.

4.2. J2.1 and J2.2 SimpleMotion & E-stop ports

SimpleMotion V2 communication link and Argon drives use RJ45 connectors and cables as physical connection standard, which is well known from Ethernet connectors and same cables may be used with SimpleMotion wiring.

	Don't use crossover cables in a SimpleMotion V2 system!

4.2.1. Bus properties

SimpleMotion V2 uses RS485 electrical serial communication standard for all data transfer. Some main benefits of using RS485 are:

- Multidrop buses possible (up to 32 devices in single serial link)
- High reliability due to differential signaling
- High data rates and long cable lengths possible UART
- Easy to interface even from smallest microcontrollers with
- Low wire count, only 2 signal wires + ground needed
- Bidirectional data transfer (receive & transmit) in one wire pair
- Cabling with standard RJ45 Ethernet cables

As default SimpleMotion V2 uses 460800 bps bitrate and can deliver over 10 000 motion commands per second.

4.2.2. PC connection

SimpleMotion V2 devices can be controlled and configured by using a PC computer and compatible RS485 adapter. The most common way is to use USB to SimpleMotion V2 adapters such as the SimpleMotion V2 USB adapter (http://granitedevices.com/wiki/SimpleMotion_V2_USB_adapter).

It is also possible to make one by following these instructions: DIY SimpleMotion V2 adapter (http://granitedevices.com/wiki/DIY_SimpleMotion_V2_adapter).

4.2.3. Using SMV2 port as E-stop & Enable input

In SMV2 compatible drives, the SMV2 connector acts also as emergency stop or Safe torque off input. User may connect an e-stop button directly at the end of device chain to gain reliable stopping mechanism for all linked devices.

4.2.4. Wiring with SMV2BRK

The preferred method to wire STO and Enable signals to SM bus is to add a SMV2BRK break out board at the end of bus chain. SMV2BRK acts as RS485 termination resistor and a wire terminal for STO and Enable signals with easy interfacing to switches.

For commissioning of SMV2BRK, see the dedicated SMV2BRK page at

http://granitedevices.com/wiki/SMV2BRK.

4.2.5. Wiring with IONICUBE devices

IONICUBE motherboards support SMV2 and can be connected to the same bus with Argon drives. When using these motherboards, see IONI & IONICUBE user guide for wiring.

4.2.6. Wiring with bare RJ45 cable

To terminate SMV2 bus and connect switches without SMV2BRK, see SimpleMotion V2 termination with bare cable.

4.3. J3 24 V power and motor brake port

J3 is a 3 pole terminal block type connector used for supplying 24 VDC to drive and optionally controlling motor solenoid brake.

4.3.1. Pin-out

Pin #	Pin name	Description	Connection
1	BK	Motor brake output	If motor has a 24 V solenoid brake, connect brake between BK and V+
2	V+	24 V supply positive input	Connect to 24 V PSU +
3	V-	24 V supply ground, on J1, J2.x and J5 connectors tied to GND	Connect to 24 V PSU -

24 VDC typical current consumption is between 0.1 – 0.7 A depending on how much current is drawn by feedback device and an optional motor brake.

4.4. J4 power & motor port

J4 is a 10 pole terminal block connector for several functions: earthing, AC power input, motor output, regenerative resistor output and HV DC link sharing.

⚠	Dangerous & non-isolated mains potential voltages are present in the connector J4! Keep away from this connector and its wiring when drive has been powered recently. Carefully read the page Power supply safe discharging before operating.

4.4.1. Pin-out

Pin #	Pin name	Descrpition	AC/BLDC motor connection	Brush DC motor connection
1	VN	HV DC link negative rail	Do not connect, unless linking multiple drives with VN & VP to share their internal power supplies and braking resistor.	

Pin #	Pin name	Descrpition	AC/BLDC motor connection	Brush DC motor connection
2	BR	Braking resistor output	Optional braking resistor terminals. See Argon braking resistor	
3	VP	HV DC link positive rail		
4	PE	Protective earth	Connect to motor PE conductor and motor cable shield	
5	U	Motor phase output	Motor U phase [1]	Motor armature+
6	V	Motor phase output	Motor V phase [1]	Motor armature-
7	W	Motor phase output	Motor W phase [1]	No connection
8	L	AC mains supply Line	Connect to AC supply line	
9	N	AC mains supply Neutral	Connect to AC supply neutral	
10	PE	Protective earth	Connect to supply protective earth. This connection is always mandatory when any voltage larger than 30 VAC or 42 VDC is supplied to the device!. See Argon user guide/Earthing.	

1) In some motors U,V,W phases are called R,S,T instead.

4.4.2. J4 wiring guide

Wiring multiple drives with power supply & braking resistor sharing

⚠	Using HV DC bus sharing via VP and VN terminals or supplying external DC voltage to them, renders the safe torque off STO1 input unusable because STO1 is based on by cutting the AC supply. In order to preserve STO1 functionality with DC bus sharing, the STO1 signal must be fed simultaneously to all DC bus sharing drives. If an external DC supply is used (no AC input to L & N), then STO1 will not operate. STO1 will also be inoperable if DC voltage is supplied to L & N inputs instead of AC. With DC supply, STO1 ibput must be always powered as the internal relay may damage if STO1 used with DC supply.

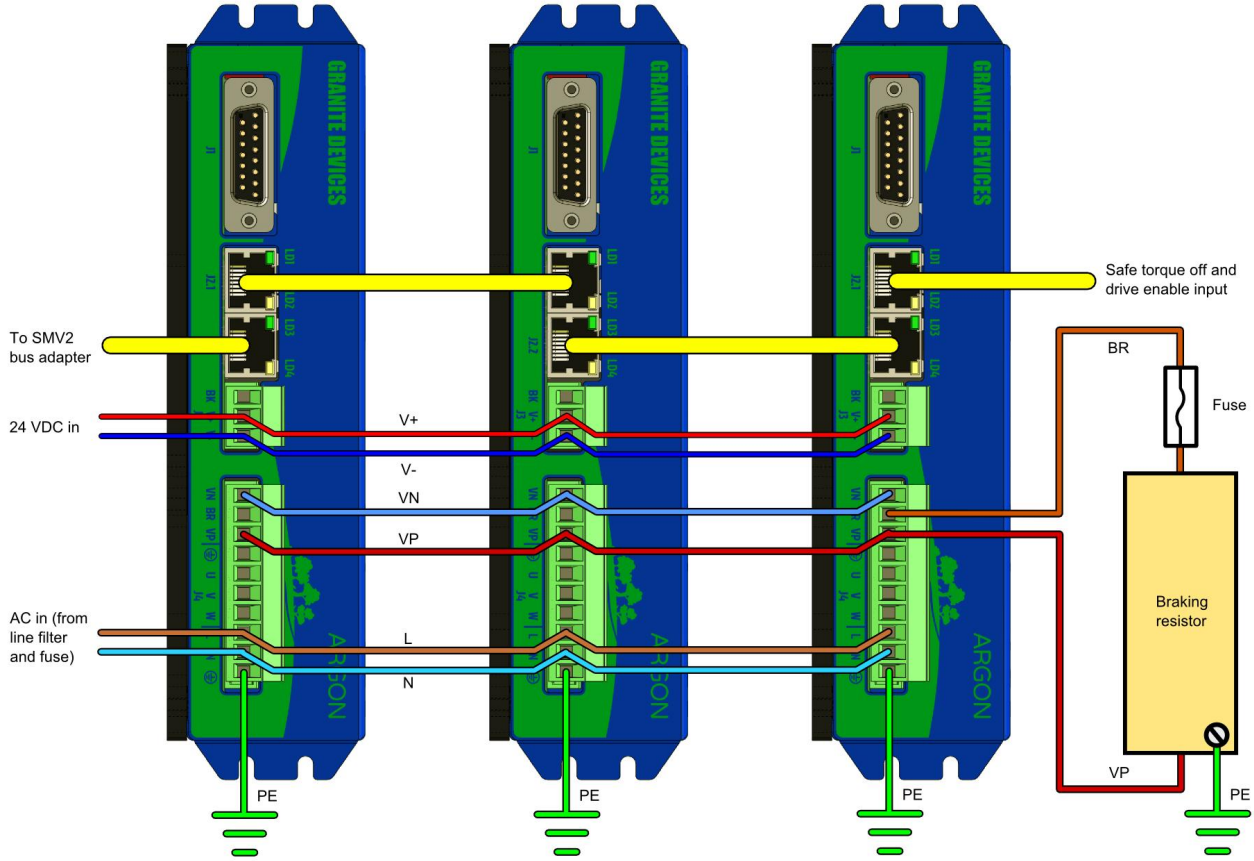

Illustration 3: Wiring multiple drives with power supply & braking resistor sharing. This illustration does not include wiring to motor (J4), motor brake (J1), controller (J5), and AC power input circuitry.

4.5. J5 Inputs/Outputs

J5 Is a 26 pin IDC connector located on the side of Argon. The connector serves as general purpose I/O with setpoint signal inputs featuring: limit & home switch inputs, status indicator outputs, analog, pulse and direction, quadrature or PWM types of setpoint inputs and secondary feedback device input.

	Exceeding ratings may affect drive operation and cause instability or even damage the drive.

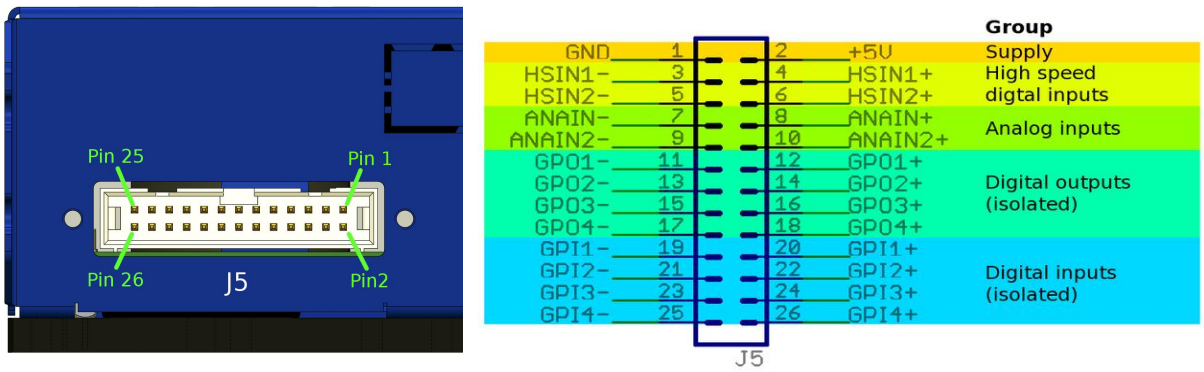

Illustration 4: J5 connector pin-out and pin groups

J5 I/O connector pin groups. In addition to J5, J2 has digital I/O's for enable and STO

- Isolated digital inputs (4 channels) - used for limit & home switches and clear faults signal [1]
- Isolated digital outputs (4 channels) - used for status indication [1]
- Differential analog inputs (2 channels) - used as Analog setpoint [1]
- Differential digital inputs (2 channels) - used for pulse/direction or second encoder [1]
- Digital inputs (3 channels) - used for safe torque off and drive enable
- Digital output (1 channel) - used for motor solenoid brake

1) Functions may be altered by modifying the Argon open source firmware

4.5.1. Pin-out

Pin #	Pin name	Electrical	Isolated	Function [1]
1	GND	Supply	No [2]	Ground
2	+5V_OUT	Supply		5 V output
3	HSIN1-	High speed digital input		• Step pulse train (in Pulse and direction setpoint mode) • Quadrature A channel (in quadrature setpoint mode) • PWM input direction (in PWM+Dir setpoint mode)
4	HSIN1+	High speed digital input		
5	HSIN2-	High speed digital input		• Direction signal of pulse train (in Pulse and direction setpoint mode) • Quadrature B channel (in quadrature setpoint mode) • PWM (in PWM and PWM+Dir setpoint modes)
6	HSIN2+	High speed digital input		
7	ANAIN1-	Analog input		Analog input setpoint
8	ANAIN1+	Analog input		
9	ANAIN2-	Analog input		Direction reversal signal for analog input setpoint signal.
10	ANAIN2+	Analog input		
11	GPO1-	Digital output	Yes [2]	Servo ready status. True when drive is initialized and ready to accept user commands/setpoint.
12	GPO1+	Digital output		
13	GPO2-	Digital output		Position/velocity control mode tracking error warning status. True when tracking error has reached more than user configured 1/8 of fault limit value or when drive is not enabled. May be used by controller to throttle the setpoint thus avoid triggering a tracking error fault. May require FW upgrade.
14	GPO2+	Digital output	Yes [2]	
15	GPO3-	Digital output		Fault stop status. True when drive is stopped due to

Pin #	Pin name	Electrical	Isolated	Function [1]
16	GPO3+	Digital output		fault.
17	GPO4-	Digital output		Braking status. Set true when drive attempts to brake motor.
18	GPO4+	Digital output		
19	GPI1-	Digital input		Home switch input.
20	GPI1+	Digital input		
21	GPI2-	Digital input		Positive feed enable input. Used for axis limit switches.
22	GPI2+	Digital input		
23	GPI3-	Digital input		Negative feed enable input. Used for axis limit switches.
24	GPI3+	Digital input		
25	GPI4-	Digital input		Clear drive faults input. Transition from false to true attempts to reset active faults of drive. If drive is simultaneously in enabled state, motor will start moving immediately.
26	GPI4+	Digital input		

1) This is the default function with stock firmware. Function may be different in future or custom firmware versions.

2) Non-isolated lines are referenced to GND pin / J3 V- terminal. Isolated lines have functional isolation between GND and other isolated ± -pairs.

4.5.2. Internal schematics of pin groups

These images show the circuity behind the J5 connector inside the Argon drive (simplified schematics). Left side end represents J5 pins and right side continues to drive internal circuity.

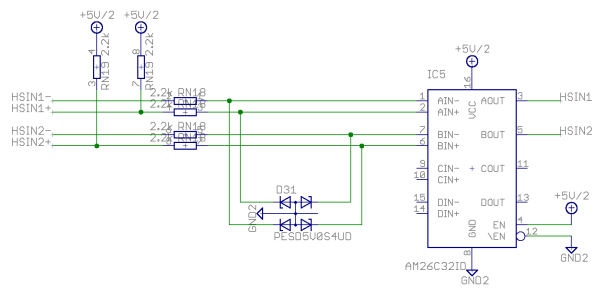	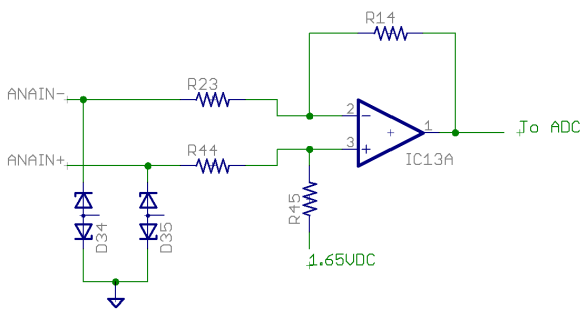
High speed digital input circuity inside the drive. Total 1 of these circuits.	**Analog input** circuity inside the drive. Total 2 of these circuits.
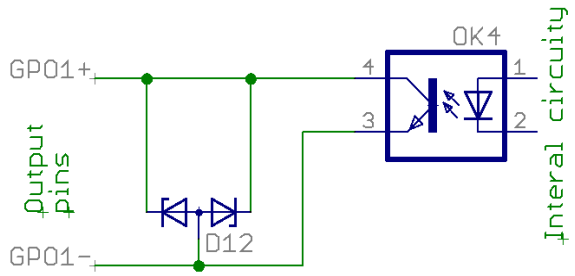	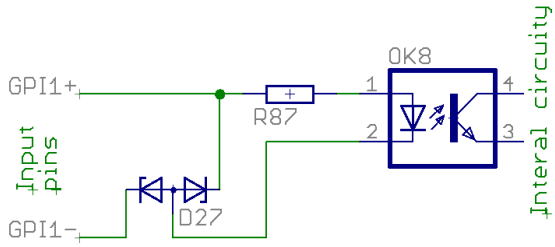
Digital output circuity inside the drive. Total 4 of these circuits.	**Digital input** circuity inside the drive. D27 protects optocoupler from reverse polarity and ESD. Total 4 of these circuits.

4.5.3. Wiring guide

4.5.3.1. Supply pins

Supply pins output a regulated 5 V voltage to external circuits. GND pin is tied to J3 connector V- terminal.

Electrical properties

- Output voltage 4.9 – 5.2 V
- Maximum load 500 mA
- Maximum injected current -10 mA

	Never connect multiple supply outputs parallel. Supply output may be connected only current consuming circuity to prevent current injection to the supply port.

4.5.3.2. High speed digital input group

HSIN is differential digital input capable of receiving digital signals up to 4 MHz.

Electrical properties

- Maximum voltage to HSINx± pins referenced to GND: -0.5 to 6 V. Nominal 3.3 or 5.0 V.
- Maximum injected current ±10 mA
- When negative input (HSINx-) is left floating, it floats around 2.5 V
- Input state reads logic 1 when voltage on positive pin is greater than voltage on negative pin, otherwise it's logic 0

Wiring when driving using differential source

- Positive outputs of source to HSINx+
- Negative outputs of source to HSINx-
- GND must be connected to source ground

Wiring when driving using single ended source (TTL, CMOS or open collector)

- Outputs of source to HSINx+
- Leave HSINx- floating
- GND must be connected to source ground

4.5.3.3. Analog input group

Analog input accepts ±10 V from and may be used as setpoint signal. Electrical properties

- Input impedance ~ 10 kΩ
- Maximum ANAINx± pin voltage vs GND ±25 V
- Maximum injected current ±10 mA
- Sampling resolution 12 bits

Wiring to differential signal source

- Connect positive output to ANAINx+
- Connect negative (inverted) output to ANAINx-
- Connect source ground to GND

Wiring to single ended signal source

- Connect output to ANAINx+
- Connect source ground to ANAINx-
- Connect source ground to GND

Wiring to 0 – 10 V analog output with digital direction output

- Follow the earlier guidelines but connect controller's direction signal to ANAIN2+ and the ground reference of digital output to ANAIN2-. Setpoint gets inverted inside the drive if ANAIN2 voltage is between 3 – 24 VDC and non-inverted between 0 – 3 VDC. May require FW upgrade.

4.5.3.4. Digital output group

Digital output is an optoisolated transistor output to drive various types of inputs of target devices (logic gates, relays, lights etc) Electrical properties

- Load voltage range 3 – 24 V
- Maximum allowed load 50 mA
- Logic 1 state equals conducting state of optocoupler transistor (current flows from GPO+ to GPO- pins), logic 0 stops current flow between GPO+ to GPO- pins.
- + to - pin voltage drop at 50 mA less than 2 VDC

Wiring to logic gate input (CMOS or TTL)

- Connect GPO+ pin to target VCC (typ 5 V)
- Connect GPO- pin to target input pin (so input pin is pulled to 5V when output state is logic 1)

	Multiple GPO's may be wired parallel to combine multiple status signals into one wire. In such connection the combined output becomes logic 1 (conductive) if any of the paralleled outputs becomes logic 1.

4.5.3.5. Digital input group

Digital inputs are optoisolated (floating potential) inputs for general purpose control signals. Electrical properties

- Signal voltage range 3 – 24 V
- Logic 0 when difference between + and - inputs less than 1.5 V, logic 1 when voltage is between 2.9 – 25 V
- Current needed to drive logic 1 is 0.8 – 9 mA depending on input voltage
- Maximum voltage difference between GPIx± inputs 27 VDC
- Maximum voltage difference between GPIx± inputs vs GND 120 VDC

Connection to electromechanical switch or relay

- See schematics image in right side

Connection to CMOS source

- Connect source output to GPIx+ input
- Connect source ground to GPIx- input

Connection to open collector or TTL source

- Connect source output to GPIx- input
- Connect source VCC (typ 5 V) to GPOx+ input

	Digital input and output isolation is only functional and does not provide safety insulation. Connect only to ELV circuits.

4.5.4. Examples

4.5.4.1. Wiring axis limit and home switches to J5

To operate the motor, limit switches must be connected to the GPI1 and GPI2. Feeding logic 1 to one of

these ports enables axis motion feed in certain direction.

The behavior of feed enable signals can be configured via Granity machine tab. Logic 1 to these pins is required for drive operation

- GPI1 - enable positive direction feed.
- GPI2 - enable negative direction feed.

Home switch (optional)

- GPI3 - home switch input. Polarity can be configured via Granity.

The image below shows a way to connect switches to J5 port. Inputs are supplied by the J5 connector 5V output. Alternatively the switches may be also supplied from an external 5 – 24 VDC supply.

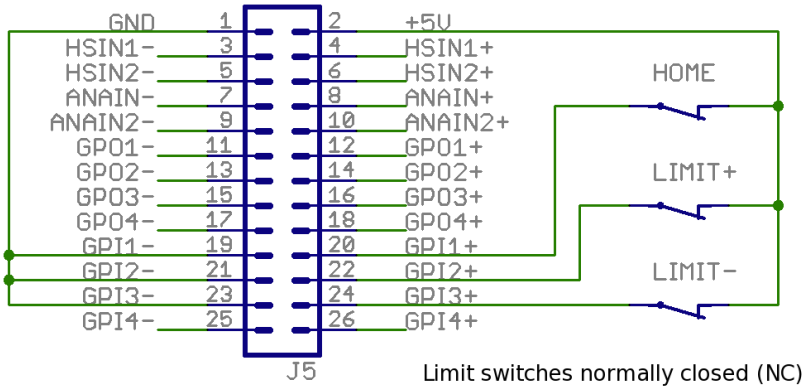

The example below illustrates an alternative way of connecting limit switches that are connected in series. However this way requires that axis is being manually pulled away from end of travel if either switch is open as drive doesn't know which way is the safe running direction.

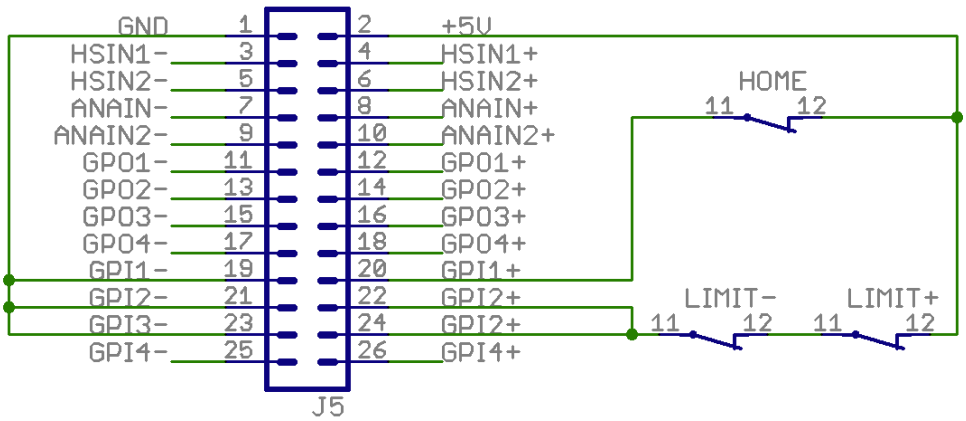

4.5.4.2. Alternative limit switch wiring considerations

It is possible to connect limit switches several way, or omit them completely. The table below summarizes the different methods:

Method #	Connections / configurations	End of travel causes a fault stop state	End of travel causes active braking of motor	Can move motor electrically out end of travel
A	Connect limit switches independently to GPI2 and GPI3 inputs	Yes [1]	Yes [1]	Yes
Remarks	This is the most typical method used			
B	Connect limit switches in series to GPI2 and GPI3 inputs parallel	Yes [1]	Yes [1]	No
Remarks	Drive has info only that limit switch is open but no info about which way is safe to move			
C	No limit switches, instead use homing function (position control mode only) and set soft travel limits by parameterization	No	Yes	Yes
Remarks	Sensorless & wireless solution			
D	Connect limit switches Safe torque off input	Yes	No, motor may free wheel	No
Remarks	A very secure way to remove torque from motor. If such feature is desired, it's recommended to install second pair of limit switches or use soft travel limits that stop motion *before* the STO switches, so STO switches would serve only as backup.			
E	Connect limit switch to enable drive input	No	Yes	Yes
Remarks				

1) Depends on parameterization.

4.5.4.3. Typical setpoint examples

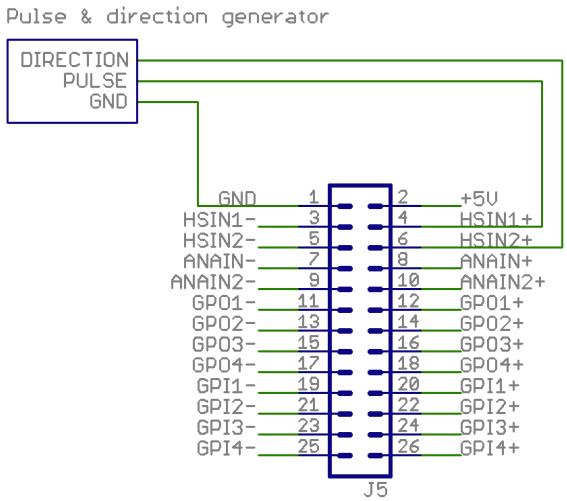

Single ended pulse and direction controller.

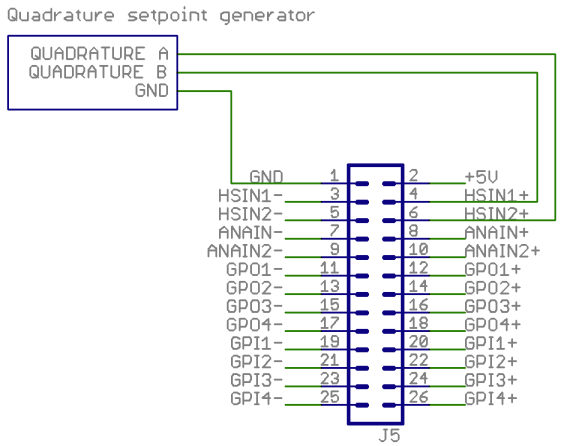

Single ended quadrature controller.

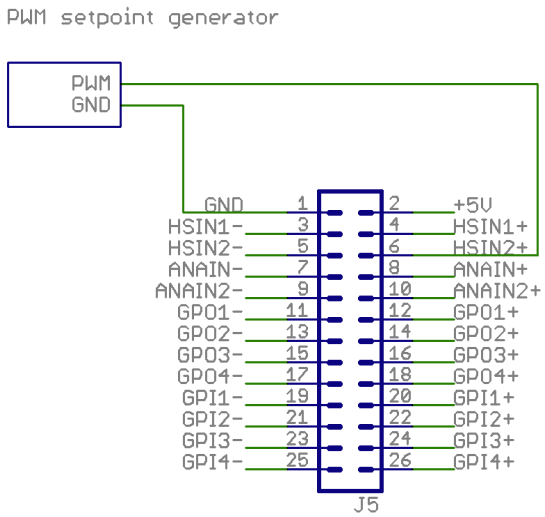

Single ended PWM controller.

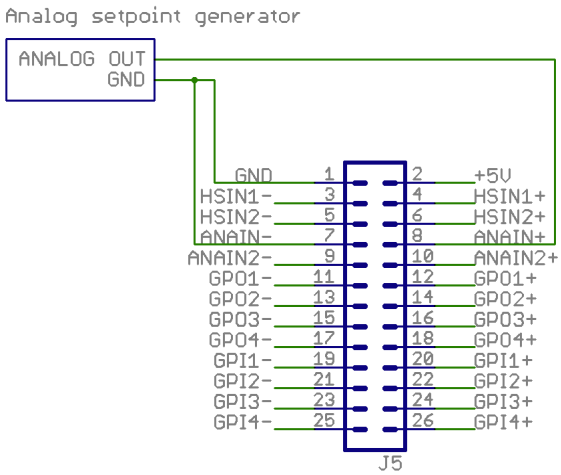

Single ended Analog setpoint controller. Maximum analog signal voltage is ±10V.

4.5.4.4. 0 – 10 V analog input with digital direction signal

Follow the earlier guidelines but connect controller's direction signal to ANAIN2+ and the ground reference of digital output to ANAIN2-. Setpoint gets inverted inside the drive if ANAIN2 voltage is between 3 – 24 VDC and non-inverted between 0 – 3 VDC. May require FW upgrade.

4.5.4.5. Complete example with pulse & direction

The examples above can be combined to achieve the user goals. The example below has complete set of I/O features used.

- Pulse & direction set point
- Clear faults output (off-on-off pulse generated by controller user if FAULT input goes on)

- Monitoring of drive state: servo ready, tracking error warning, drive fault, motor braking status
- Axis limit switches & home switch

Notes:

- The controller in the example has 5 V single ended inputs & outputs
- Controller inputs have pull-down resistor or other means to ensure *off* or 0 state when input is floating
- It's not required to to monitor & control the I/O lines at controller

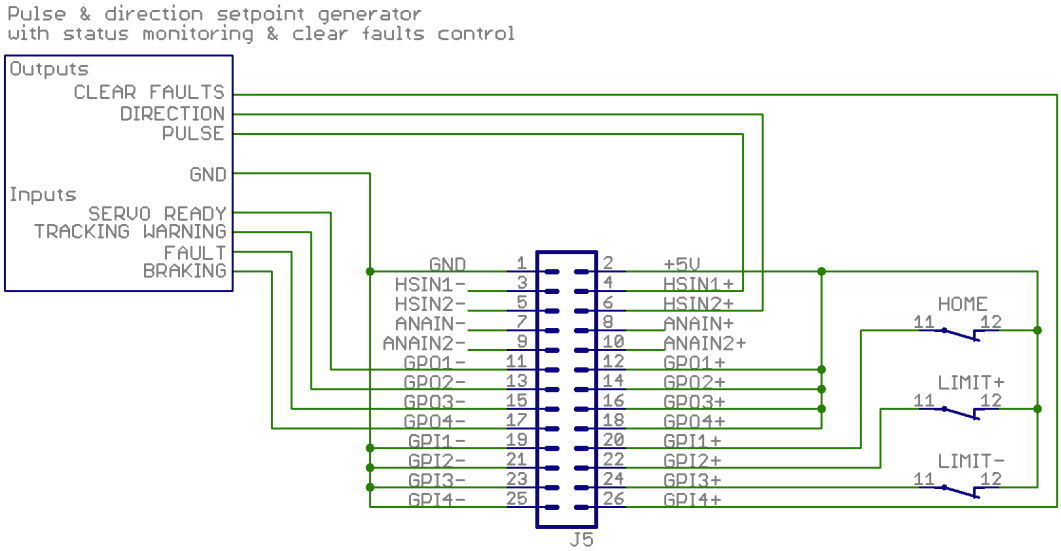

4.5.4.6. Complete example with differential analog setpoint

Same as above expect this time the setpoint signal is a differential analog voltage output (max ±10 V).

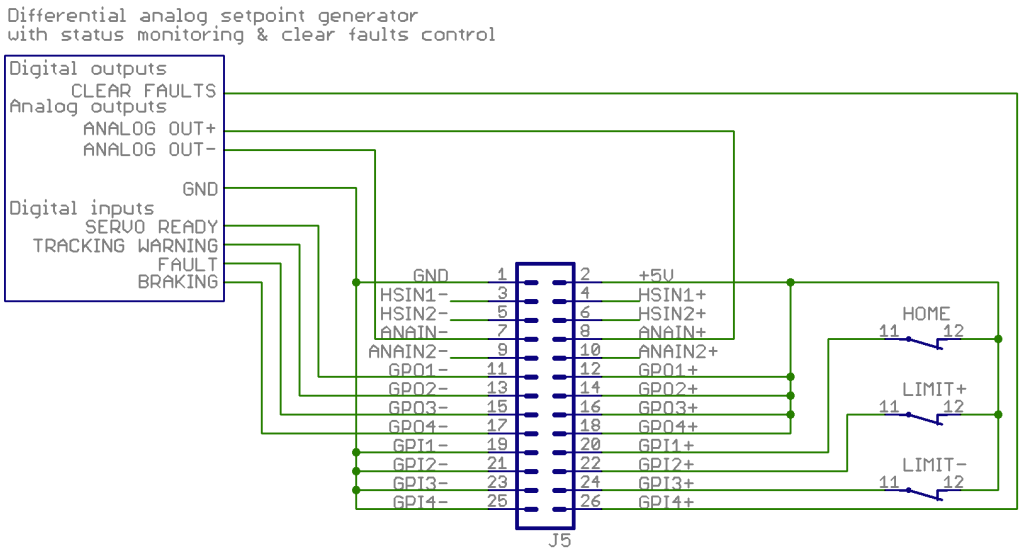

4.6. J6 Expansion slot

This slot is reserved for Argon add-on card that may be installed inside the drive.

5. Making the first Granity connection

5.1. The setup process

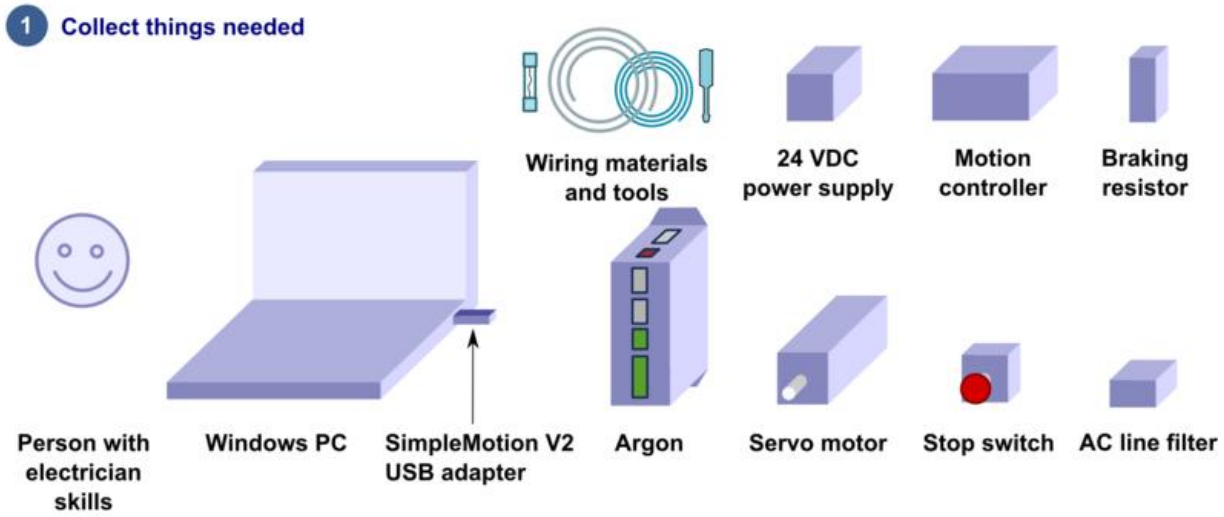

Read the list of things needed for details (section 5.2.).

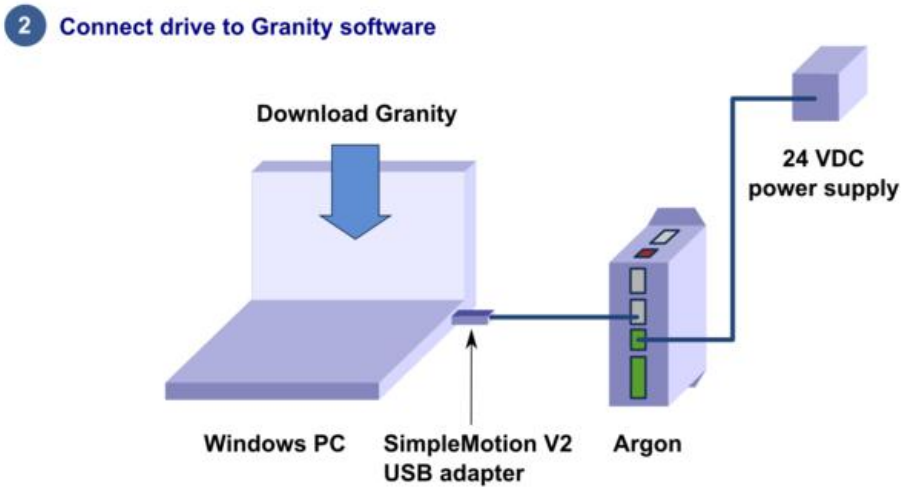

Connect drive to PC with SimpleMotion V2 USB adapter and Granity to test connection, upgrade firmware if necessary and to learn Granity. If you're already familiar with all this, you may skip this step. Read the article Making the first Granity connection.

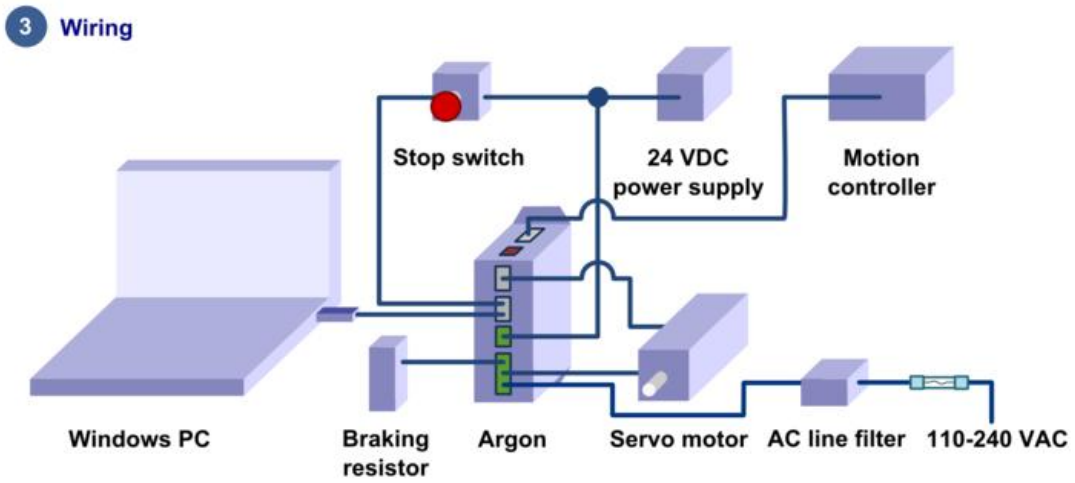

Carefully do the full wiring of the servo system. Consult a qualified electrician if necessary as dangerous voltages will be present. Before powering up, triple check everything by using multimeter to find short circuits. Read the main article Wiring.

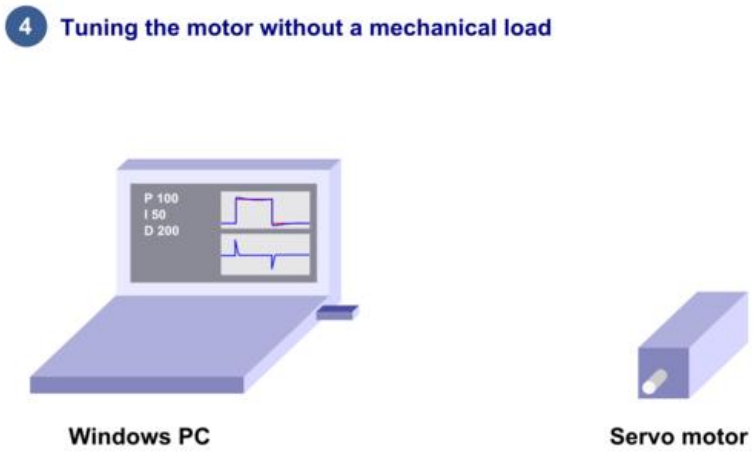

Power-up the system and connect again with Granity. Now set-up the motor to work as intended. See the main article Drive parameterization. If you already have a working configuration to your motor model, you may just load the settings file to the drive.

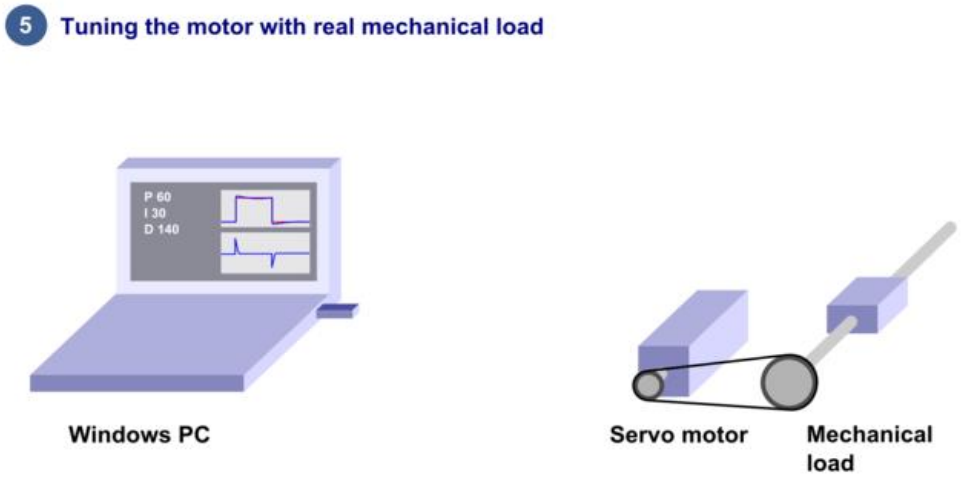

After motor and drive are fully functional, connect motor to the mechanical load and find the optimum velocity or position control gains. Read the main article Servo motor tuning guide.

5.2. List of things needed

The list of necessary things to build a working servo system with Argon

- Argon drive
- SimpleMotion V2 USB adapter
- 2 or more RJ45 Ethernet cables (see details & examples)
- Regulated 24 VDC power supply, output capability at least 0.5 A per drive
- A Argon compatible servo motor
- Shielded power conductors for AC input, motor and braking resistor. Non-shielded will also work but increase EMI.
- Fuses with fuse holder
- Windows PC
- Motion controller. This may be also a software on a computer.

Optional but highly recommended items

- Emergency stop button (normally closed NC type) or equivalent
- Braking resistor
- Ferrite core EMI filters, samples included with Argon package
- AC Power line filter, see list of recommended types here

Needed for high current motors (> 4 A average)

- A cooling fan and/or additional heat sinks. See list of compatible heat sinks here.

Tools needed

- Screwdrivers
- Wire cutter

Skills needed

- Qualified electrician skills (license to make mains AC connections)
- Basic knowledge of servo systems

5.3. Preparations

1. Download and install the Granity software. Lates version is downloadable from the link: Granity software for windows (approx 15 MB)
2. Connect PE of J4 connector to protective earth. After that wire 24 VDC power supply to Argon's J3 connector, however do not power up yet.
3. Set Argon DIP switches to give an bus address to the device.
4. Connect Argon J2.1 connector to SimpleMotion V2 USB adapter with a straight Ethernet cable and plug USB adapter to computer.
5. Power up the 24 VDC power. Some leds should start blinking at the drive (more about blinking sequences).
6. Launch Granity software and:
    1. Go to Connect tab
    2. Ensure that "SimpleMotion V2 Adapter" is selected from drowdown list called *Communication interface device*.[1]
    3. Click *Connect to drive*
    4. Once list of connected drives pop up, select the one you connected and click *Open*

Now if everything has gone well, you should see information like drive model and serial number on the Connect tab. Connection has been successfully tested and drive may be disconnected to proceed with next setup step.

1) If multiple choices are named as "SimpleMotion V2 Adapter", then try each of them to find the correct one. Also if no adapters found, try launching Granity again as the list updates only at start-up.

5.4. Device bus

5.4.1. Bus address

All SimpleMotion V2 compatible devices have a settable address that identifies the device on a multidrop communication bus. Each device sharing the same bus must have an unique address number to make error free communication possible. For example configuring bus address is required to establish a connection with Granity software.

When accessing drive through SimpleMotion V2 bus, each device in the bus should be assigned to different address between 1 to 32.

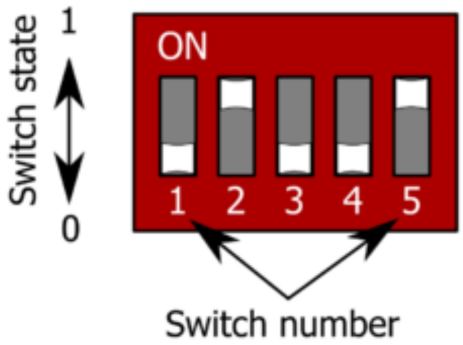

Illustration 5: DIP switch of Argon. In this case the DIP has value 01001.

Argon (servo drive) has a 5 channel DIP switch that sets the address. The table below lists all possible settings of DIP switch settings. Switches 1 – 4 set the address and the switch number 5 sets termination on or off.

Address	Bus termination	DIP switch setting (switches from 1 to 5)
255 (firmware upgrade mode)	Off	00000
255 (firmware upgrade mode)	On	00001
1	Off	00010
1	On	00011
2	Off	00100
2	On	00101
3	Off	00110

Address	Bus termination	DIP switch setting (switches from 1 to 5)
3	On	00111
4	Off	01000
4	On	01001
5	Off	01010
5	On	01011
6	Off	01100
6	On	01101
7	Off	01110
7	On	01111
8	Off	10000
8	On	10001
9	Off	10010
9	On	10011
10	Off	10100
10	On	10101
11	Off	10110
11	On	10111
12	Off	11000
12	On	11001
13	Off	11010
13	On	11011
14	Off	11100
14	On	11101
15	Off	11110
15	On	11111

5.4.2. Bus termination

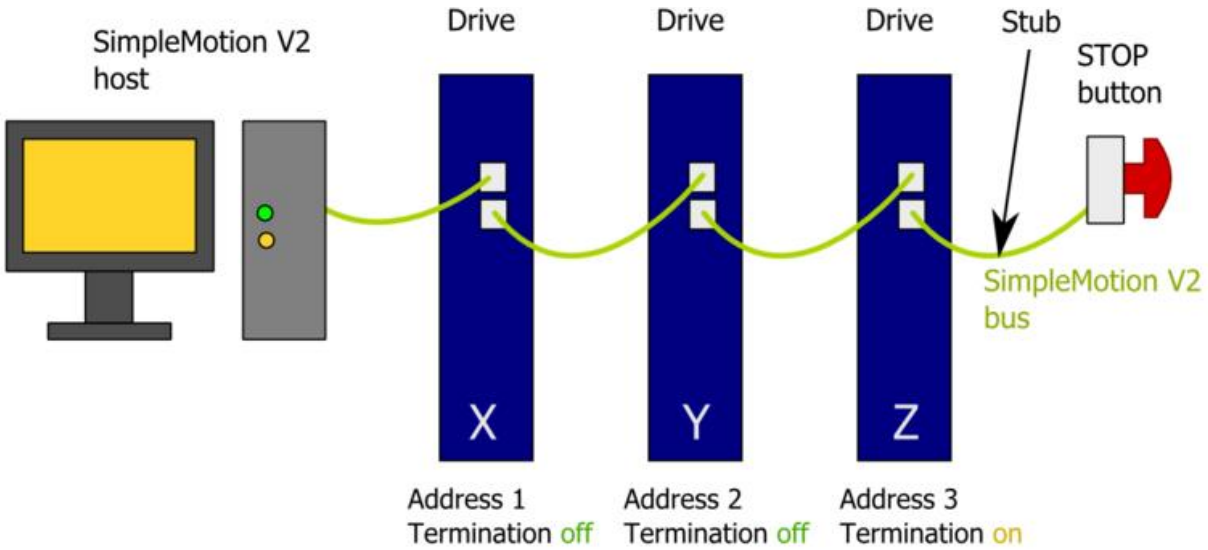

SimpleMotion V2 bus must be terminated for reliable communication. This means that last device of the bus must have termination DIP switch set to On position.

Bus may be also *alternatively* terminated with external 100 ohm resistor connected between RS485_A and RS485_B wires at the end of bus cable chain (see SimpleMotion V2 port). If DIP switch termination is used, then drive internal 100 ohm resistor is connected across the A and B wires.

5.4.3. Stub

If an E-stop button is connected with RJ45 cable after the last device, a bus **stub** is formed. Stub must not be longer than 30 cm or 1 foot to ensure reliable bus operation.

Methods to eliminate the stub on SimpleMotion V2 port cable E-stop cable if longer than 30cm E-stop cable is needed:

- Cut the RS485_A and RS485_B wires from the cable near connector, this ends the RS485 bus next to connector and minimizes stub
- Alternatively, connect termination resistor at end of RS485_A and RS485_B wires and set DIP switch termination off

5.4.4. Troubleshooting

Following errors may cause unreliable connection:

- If two or more devices have same address on a single bus
- If termination is missing or is present multiple times
- If bus stub is too long

5.5. Wiring overview

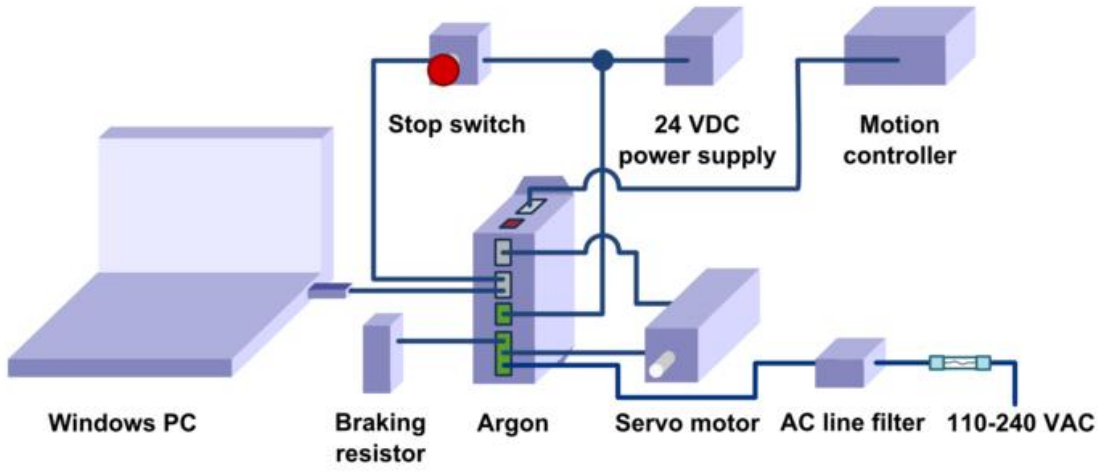

The minimum wiring for a servo system (after configuration state)

1. Safety earthing to port J4 and preferably to the Argon case
2. 24 VDC wiring to port J3
3. Safe torque off and enable signals to port J2. See how.
4. Motion controller wiring:
    1. if pulse & direction, analog, PWM or quadrature setpoint signal used, wire signals to port J5
    2. if setpoint delivered over SimpleMotion V2 bus, then a cable from SimpleMotion V2 compatible communication interface device to J2
5. Axis limit switches wired to port J5
6. Feedback device wiring to port J1
7. Motor connection to port J4
8. AC input power to port J4. Use an external fuse with this input.

Optional wiring

1. AC Power line filter on the wire entering J4
2. Wiring of optional braking resistor to port J4
3. Motor solenoid brake wiring to port J3

Additionally a cable from SimpleMotion V2 USB adapter to port J2 is required for drive configuration with Granity.

	A proper Argon installation orientation and spacing with optional heat sinks and an optional cooling fan. For high power application, replacing the internal fuse may also be necessary.
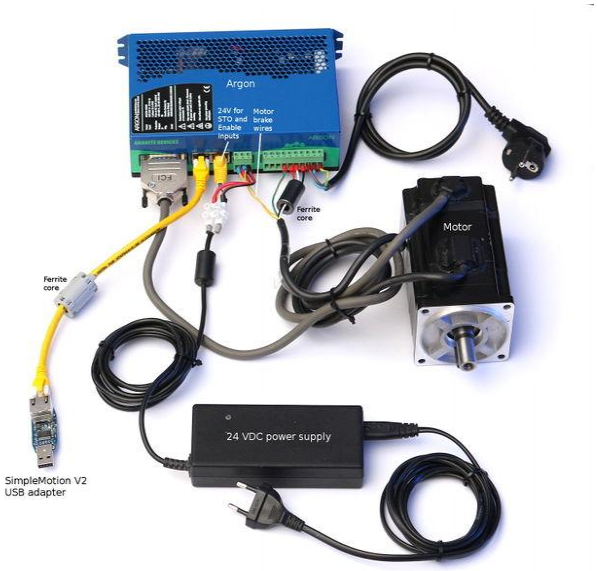	A working test setup wiring of Argon. Just connection to a computer and AC power is needed to operate the drive and motor with Granity or other SimpleMotion V2 app. Note: emergency stopping, enhanced grounding, fuse and all recommended EMI filters are not installed.
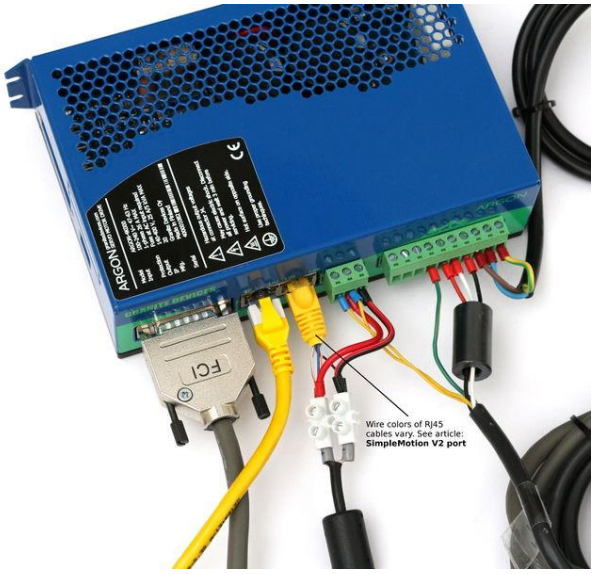	A close-up of the test test wiring. Note: emergency stopping, enhanced grounding, fuse and all recommended EMI filters are not installed. The small print: Wire colors of RJ45 cables vary. See article: SimpleMotion V2 port.

5.5.1. Mating parts

See list of ARGON mating connectors and accessories at http://granitedevices.com/wiki/Argon_mating_connectors_and_accessories.

5.5.2. Wiring recommendations

Read general wiring recommendations articles at:

- http://www.electrical-installation.org/enwiki/Wiring_recommendations
- http://www.electrical-installation.org/enwiki/EMC_implementation_-_Implementation_of_shielded_cables

5.6. Basic wiring scheme

Before wiring, be sure to read through the main articles regarding J1 – J5 ports.

5.6.1. Wiring a single drive

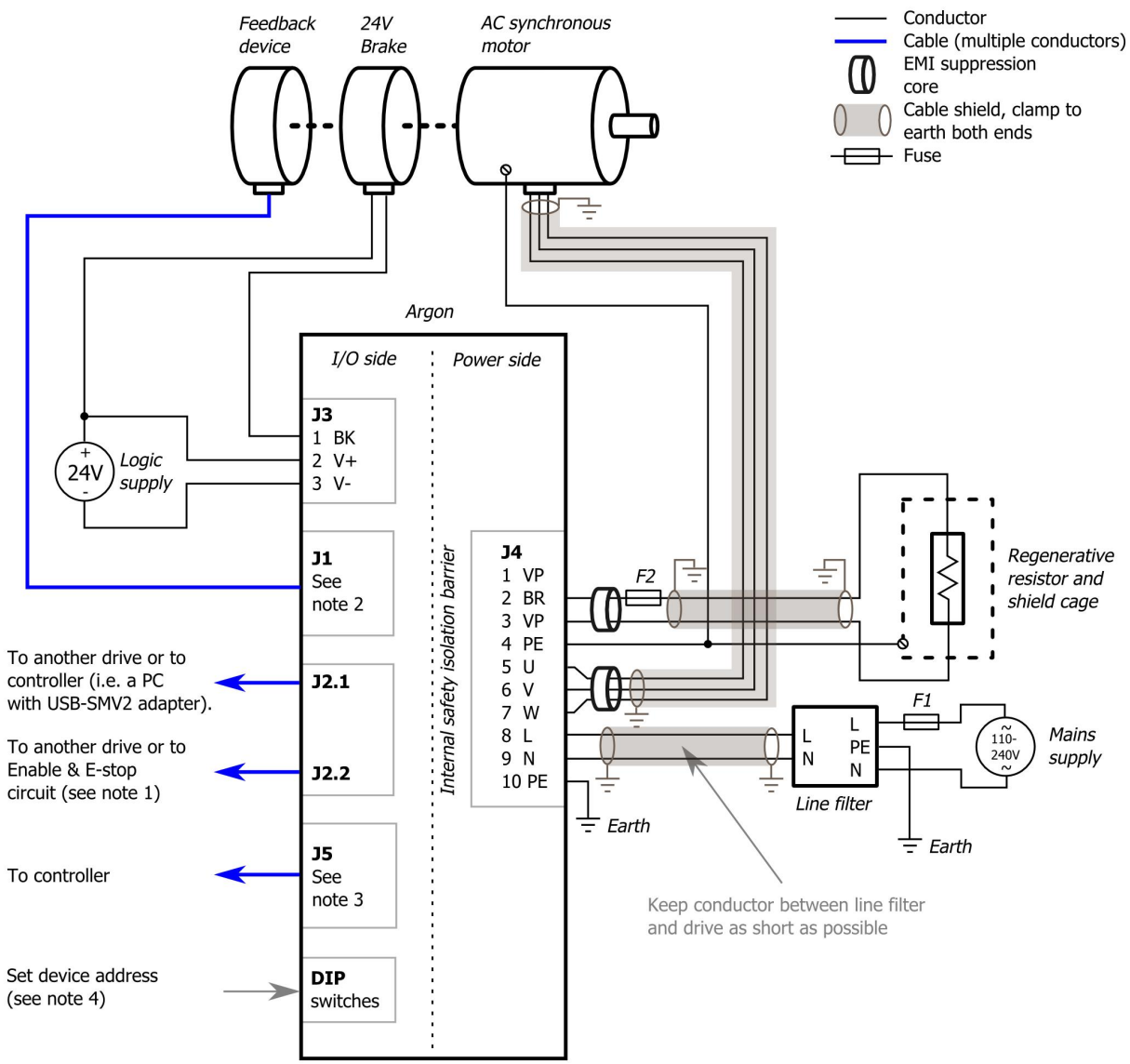

5.6.1.1. Connecting multiple drives

Please see section 4.4.2.

6. LED indicators

Argon has four front panel led indicators which have dedicated indicating tasks

- LD1 SimpleMotion transmit led. Blinks when drive transmits data to bus.
- LD2 SimpleMotion receive led. Blinks when drive receives data from bus.
- LD3 Fault indicator
- LD4 Motor control state indicator

6.1. How to read indications

- LD1 and LD2, blink very briefly during data transmission. Due to short light pulses, these lights appear dimmer than other Ls.
- LD3 and LD4 have programmed blinking sequences. Sequences consists series of short (S) and long (L) light pulses. For example LLS means the led will blink two long flashs and then one short flash. After sequence there will be a pause before the sequence repeats.
- LD3 and LD4 are independent and can show fault and motor state simultaneously. To easier reading sequence, cover one led with a thumb to be able to concentrate to one led.
- LD3 and shows the first fault occurred if multiple fault states are active simultaneously.

6.2. List of all LD3 and LD4 sequences

To see animated images, view this Wiki page in a web browser with animations enabled: http://granitedevices.com/wiki/Argon_user_guide/LED_indicators.

6.2.1. Faults originated from I/O side of drive

Only LD3 is being controlled by these faults.

	Fault reason	LED sequence as text
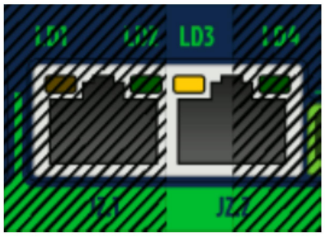	Hardware	SLLS (short, long, ...)
	Program or memory	SLSL
	Internal comm error (unable to establish comm)	SLSS
	Internal comm error (in middle of operation)	SSLL
	SimpleMotion communication	LSSS
	Other/unknown	LLSL

6.2.2. Faults originated from GraniteCore side of drive

Only LD3 is being controlled by these faults.

	Fault reason	LED sequence as text
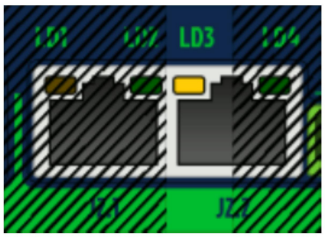	Hardware	LLSS
	Progral or memory	LSLL
	Internal comm error (CRC)	LSL
	Initialization	LSS
	Over current	SLL
	Over temperature	LSLS
	Over voltage	SLS
	Following error	LS
	Under voltage	SL
	Motion blocked or motor runaway	SSL
	Setpoint range exceeded	LSSL
	Other/unknown, possibly configuration error such as motor mode MT not selected	SSSL

6.2.3. Motor control states

Only LD4 is being controlled by these faults.

	Status	LED sequence as text	Motor output powered
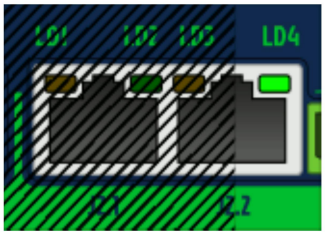	Permanent stop (need device reset)	LLS	No
	Fault stop (observe LD3 for reason)	Off	Depends on fault
	Follow error recovery motion	LS	Yes
	Initializing	SL	Yes
	Homing	LSS	Yes
	Run	On	yes
	Other/uncategorized (not any of above). For details, connect with Granity and see status bits.	LLSS	No

7. Further reading

Please also read the following articles:

- http://granitedevices.com/wiki/Category:Glossary
- http://granitedevices.com/wiki/Signal_path_of_motor_drive
- http://granitedevices.com/wiki/Servo_tuning_basics
- http://granitedevices.com/wiki/Tuning_torque_controller
- http://granitedevices.com/wiki/Tuning_position_controller
- http://granitedevices.com/wiki/Tuning_velocity_controller
- http://granitedevices.com/wiki/Category:Argon_troubleshooting